# Homestyle Dryers

Refer to Page 3 for Model Numbers

Parts

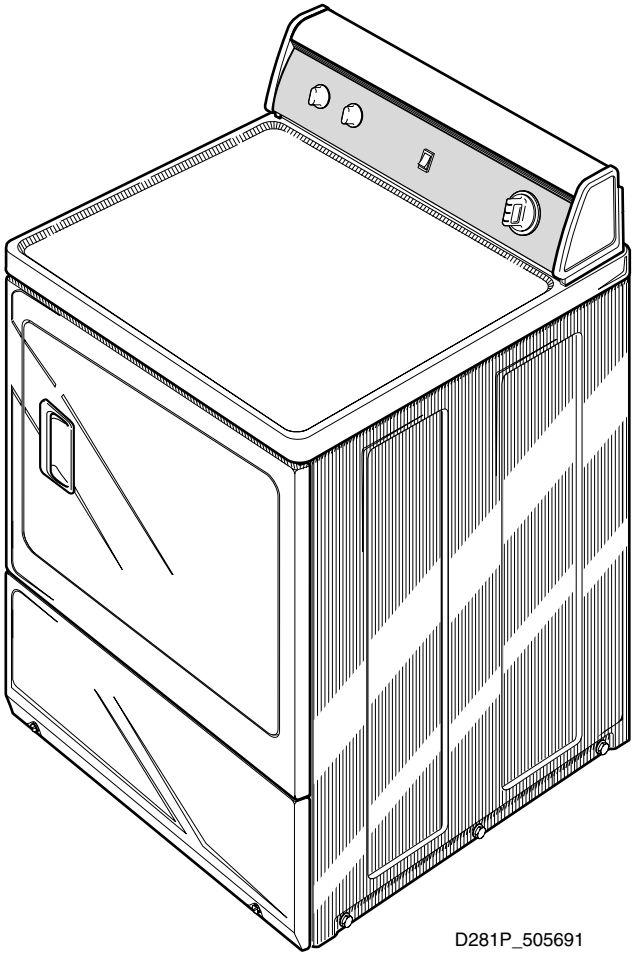


Alliance Laundry Systems

www.comlaundry.com

Part No. 505691R1
March 2005

# Table of Contents


| Title | Page |
|---|---|
| Parts Ordering Information | 2 |
| Nameplate Location | 2 |
| Model Identification | 3 |
| Graphic Panel, Control Hood and Controls | 4 |
| Cabinet Top and Control Hood Rear Panel | 6 |
| Loading Door (Drawing 1 of 2) | 8 |
| Loading Door (Drawing 2 of 2) | 10 |
| Access Panel, Front Panel and Seal | 12 |
| Motor, Exhaust Fan and Belt | 14 |
| Front Bulkhead, Air Duct, Cylinder and Removable Lint Filter | 16 |
| Front Bulkhead, Air Duct, Cylinder and Secured Lint Filter | 18 |
| Rear Bulkhead, Felt Seal, Cylinder Roller and Terminal Block | 20 |
| Heater Duct and Element Assembly | 22 |
| Heater Duct Assembly | 24 |
| Gas Valve, Igniter and Gas Conversion Kits | 26 |
| Cabinet, Exhaust Duct and Base | 28 |
| Terminals and Clips | 30 |
| Terminals | 32 |
| Terminals and Terminal Extractor Tools | 34 |
| Wire Harnesses and Wires | 36 |
| Parts Index | 37 |



© Copyright 2005, Alliance Laundry Systems LLC

All rights reserved. No part of the contents of this book may be reproduced or transmitted in any form or by any means without the expressed written consent of the publisher.

# Parts Ordering Information

If literature or replacement parts are required, contact the source from whom the machine was purchased or contact Alliance Laundry Systems at (920) 748-3950 for the name and address of the nearest authorized parts distributor.

For technical assistance, call (920) 748-3121.

# Nameplate Location

When calling or writing about your product, be sure to mention model and serial numbers. Model and serial numbers are located on nameplate(s) as shown.

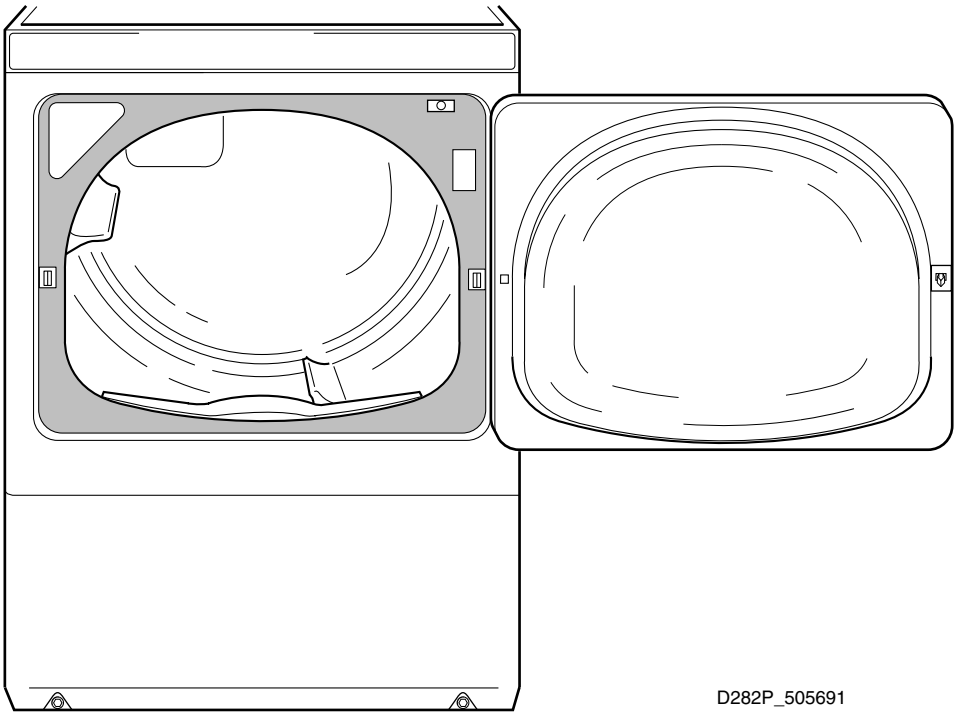



© Copyright, Alliance Laundry Systems LLC – DO NOT COPY or TRANSMIT

# Model Identification

Information in this manual is applicable to these dryer models:

LES19A*
LES33A*
LES37A*
LGS19A*
LGS19A*-1188
LGS33A*
LGS37A*

*** Add Letter To Designate Color. L - Almond W - White**


© Copyright, Alliance Laundry Systems LLC – DO NOT COPY or TRANSMIT

# Graphic Panel, Control Hood and Controls

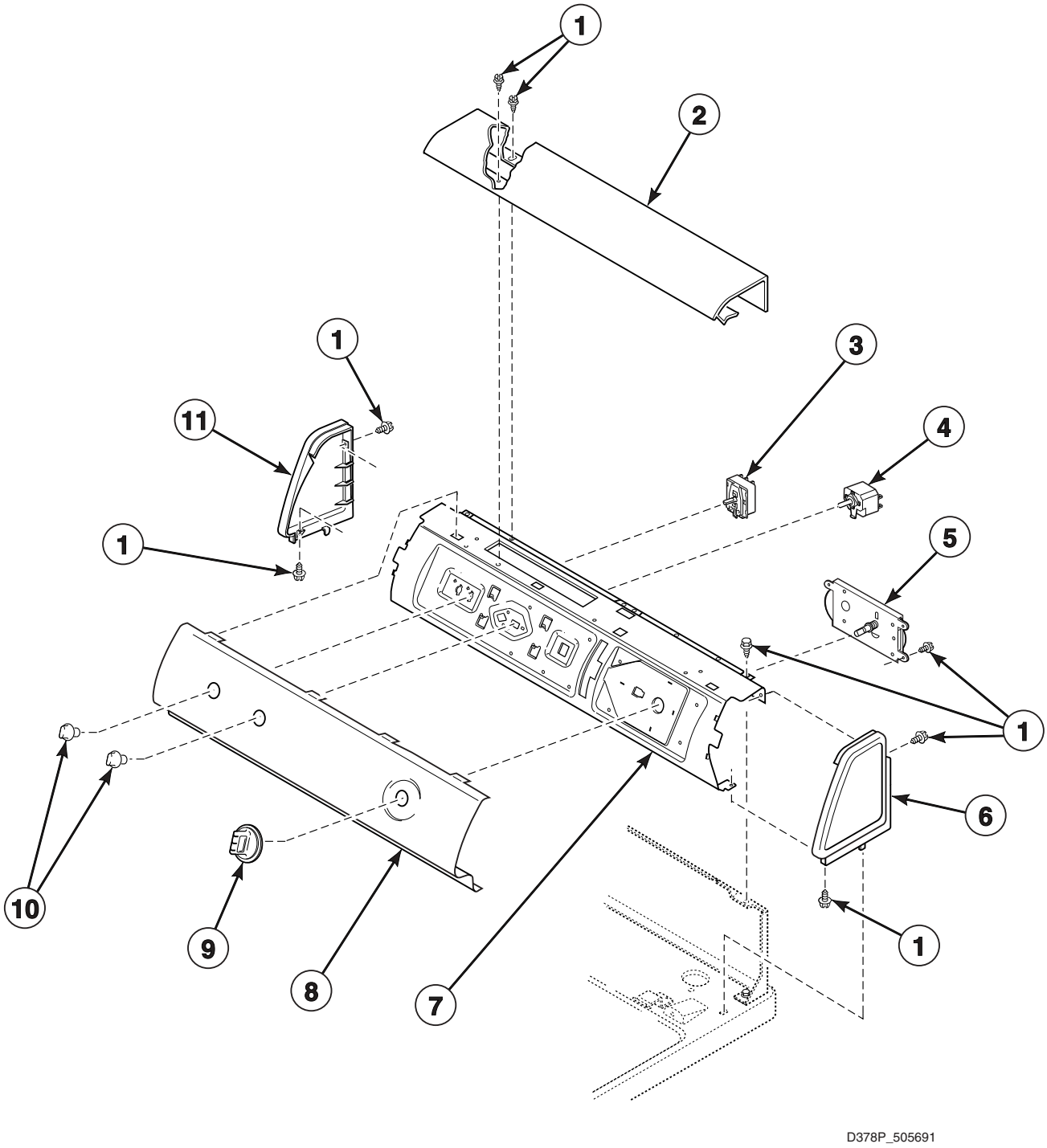



© Copyright, Alliance Laundry Systems LLC – DO NOT COPY or TRANSMIT

# Graphic Panel, Control Hood and Controls

| REF | PART NO. | DESCRIPTION | COMMENTS |
|---|---|---|---|
| 1 | 501086 | Screw | |
| 2 | 505808W | Top Cover | White |
| | 505808L | Top Cover | Almond |
| 3 | 510212 | Fabric Selector Switch | |
| 4 | 510211 | Buzzer | Adjustable; 120 Volt; Models LES33A*, LES37A*, LGS33A* and LGS37A* |
| 5 | 505797P | Timer and Harness Kit | Models LES19A*, LES33A* and LES37A* |
| | 505794P | Timer | 3 cycle; Models LGS19A*, LGS19A*-1188, LGS33A* and LGS37A* |
| 6 | 504008W | End Panel | Right; White |
| | 504008L | End Panel | Right; Almond |
| 7 | 503901 | Control Support Panel | |
| 8 | 504020W | Graphic Panel | White; Models LES33A*, LES37A*, LGS33A* and LGS37A* |
| | 504197W | Graphic Panel | White; Models LES19A*, LGS19A* and LGS19A*-1188 |
| 9 | 510287L | Timer Knob Assembly | Almond |
| | 512117W | Timer Knob Assembly | White |
| 10 | 33688 | Knob Assembly | |
| 11 | 504009W | End Panel | Left; White |
| | 504009L | End Panel | Left; Almond |

*** Add Letter To Designate Color. L - Almond W - White**


© Copyright, Alliance Laundry Systems LLC – DO NOT COPY or TRANSMIT

# Cabinet Top and Control Hood Rear Panel

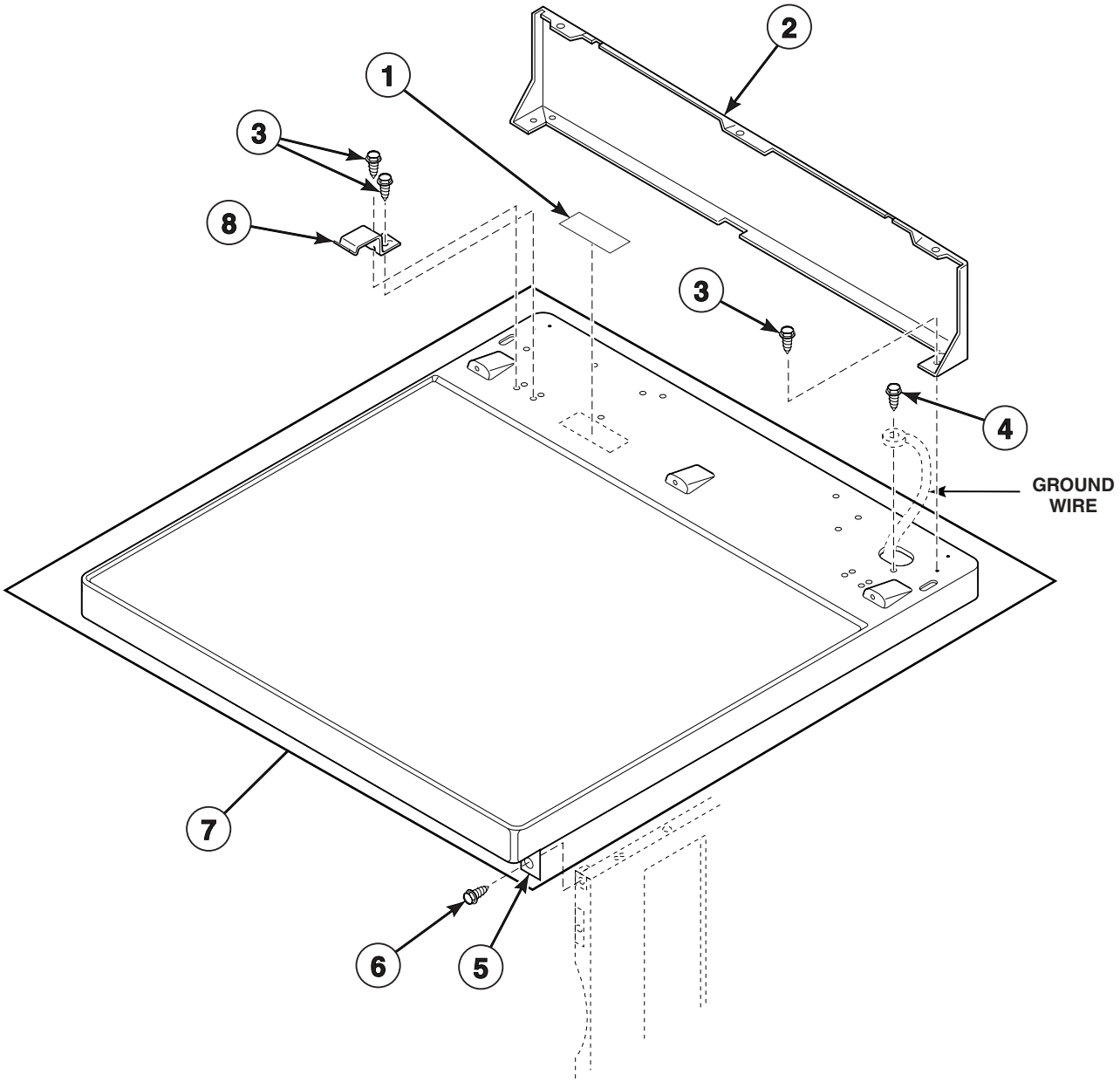


D286PZ3B_505691


© Copyright, Alliance Laundry Systems LLC – DO NOT COPY or TRANSMIT

# Cabinet Top and Control Hood Rear Panel

| REF | PART NO. | DESCRIPTION | COMMENTS |
|---|---|---|---|
| **1** | 505281 | Disconnect Power Warning Label | |
| **2** | 510099 | Hood Back Panel | |
| **3** | 501086 | Screw | |
| **4** | 503688 | Screw | |
| **5** | 510146 | Bracket | |
| **6** | 503661 | Screw | |
| **7** | 510029WP | Top Panel Kit | White; Includes 2 of item 5 |
| | 510029LP | Top Panel Kit | Almond; Includes 2 of item 5 |
| **8** | 503876 | Hold-Down Spring Clip | |


© Copyright, Alliance Laundry Systems LLC – DO NOT COPY or TRANSMIT

# Loading Door (Drawing 1 of 2)

Models LES19A*, LES33A*, LGS19A*, LGS19A*1188 and LGS33A*

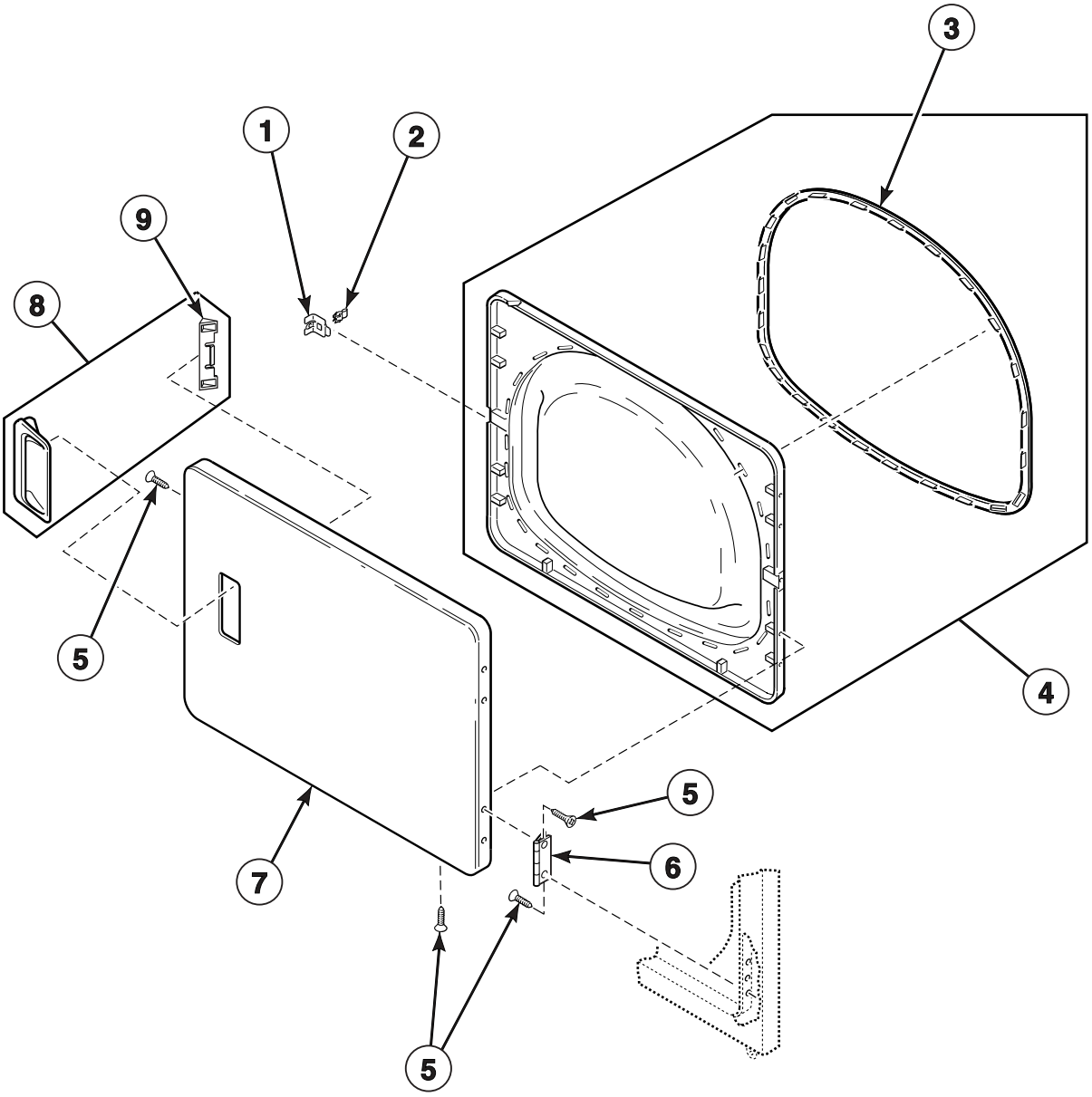


DRY1851P_505691


© Copyright, Alliance Laundry Systems LLC – DO NOT COPY or TRANSMIT

# Loading Door (Drawing 1 of 2)

| REF | PART NO. | DESCRIPTION | COMMENTS |
|---|---|---|---|
| **1** | 510127 | Door Strike Mount | |
| **2** | 510181 | Door Strike | |
| **3** | 510147P | Liner Door Seal | |
| **4** | 510289W | Liner and Seal Assembly | Includes item 3 |
| **5** | 505295 | Screw | |
| **6** | 503676 | Hinge | |
| **7** | 510013W | Dryer Door | White |
| | 510013L | Dryer Door | Almond |
| **8** | 510103WP | Door Pull and Wedge Kit | White; Includes item 9 |
| | 510103LP | Door Pull and Wedge Kit | Almond; Includes item 9 |
| **9** | 510129 | Door Handle Wedge | |

*** Add Letter To Designate Color. L - Almond W - White**


© Copyright, Alliance Laundry Systems LLC – DO NOT COPY or TRANSMIT

# Loading Door (Drawing 2 of 2)

Models LES37A* and LGS37A*

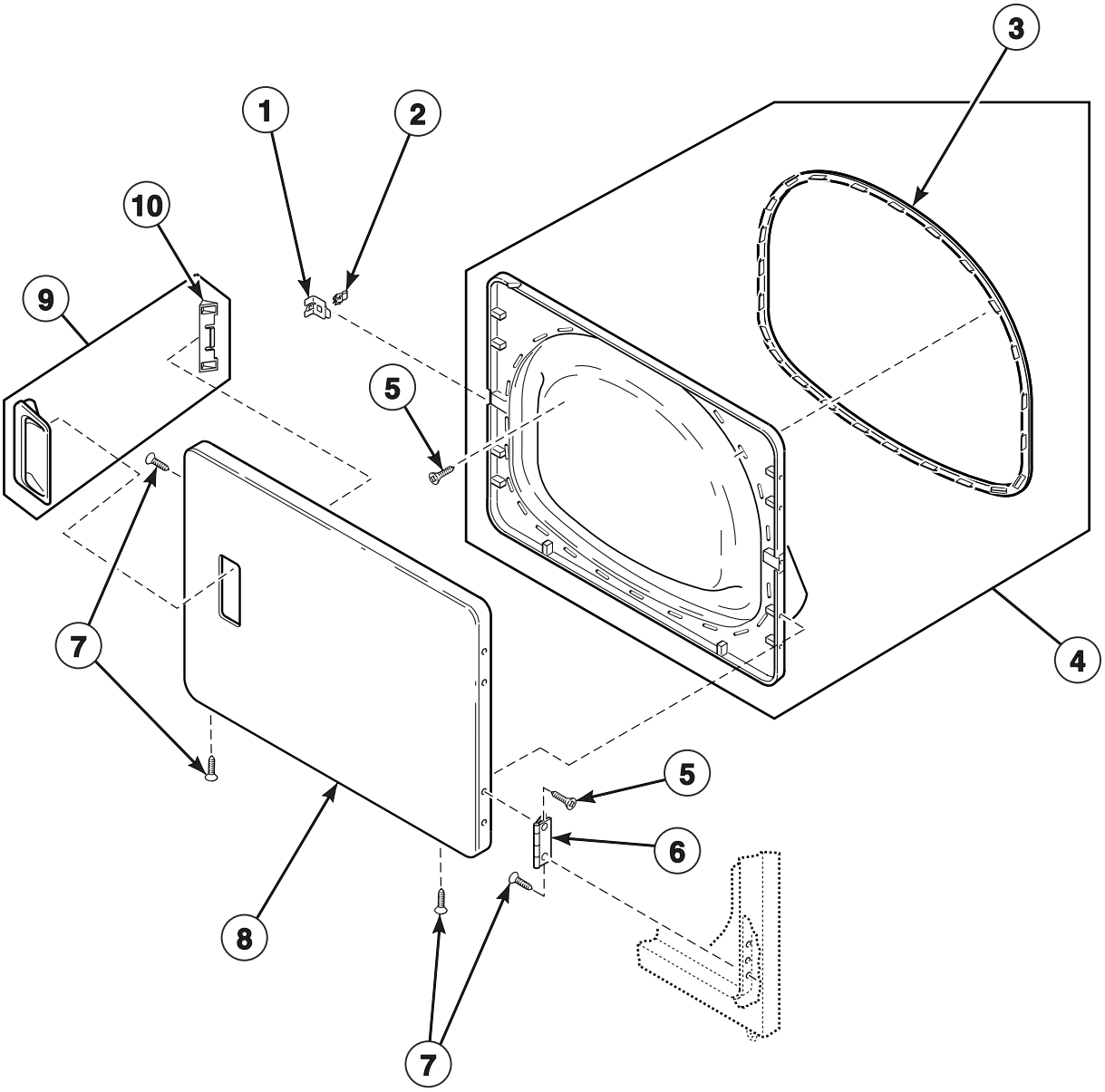


DRY1737P_505691


© Copyright, Alliance Laundry Systems LLC – DO NOT COPY or TRANSMIT

# Loading Door (Drawing 2 of 2)

| REF | PART NO. | DESCRIPTION | COMMENTS |
|---|---|---|---|
| 1 | 510127 | Door Strike Mount | |
| 2 | 510181 | Door Strike | |
| 3 | 510147P | Liner Door Seal | |
| 4 | 510163WP | Liner, Seal and Grill Assembly | Includes item 3 |
| 5 | 505295 | Screw | |
| 6 | 503676 | Hinge | |
| 7 | 500226 | Screw | |
| 8 | 510013W | Dryer Door | White |
| | 510013L | Dryer Door | Almond |
| 9 | 510103WP | Door Pull and Wedge Kit | White; Includes item 10 |
| | 510103LP | Door Pull and Wedge Kit | Almond; Includes item 10 |
| 10 | 510129 | Door Handle Wedge | |

*** Add Letter To Designate Color. L - Almond W - White**


© Copyright, Alliance Laundry Systems LLC – DO NOT COPY or TRANSMIT

# Access Panel, Front Panel and Seal

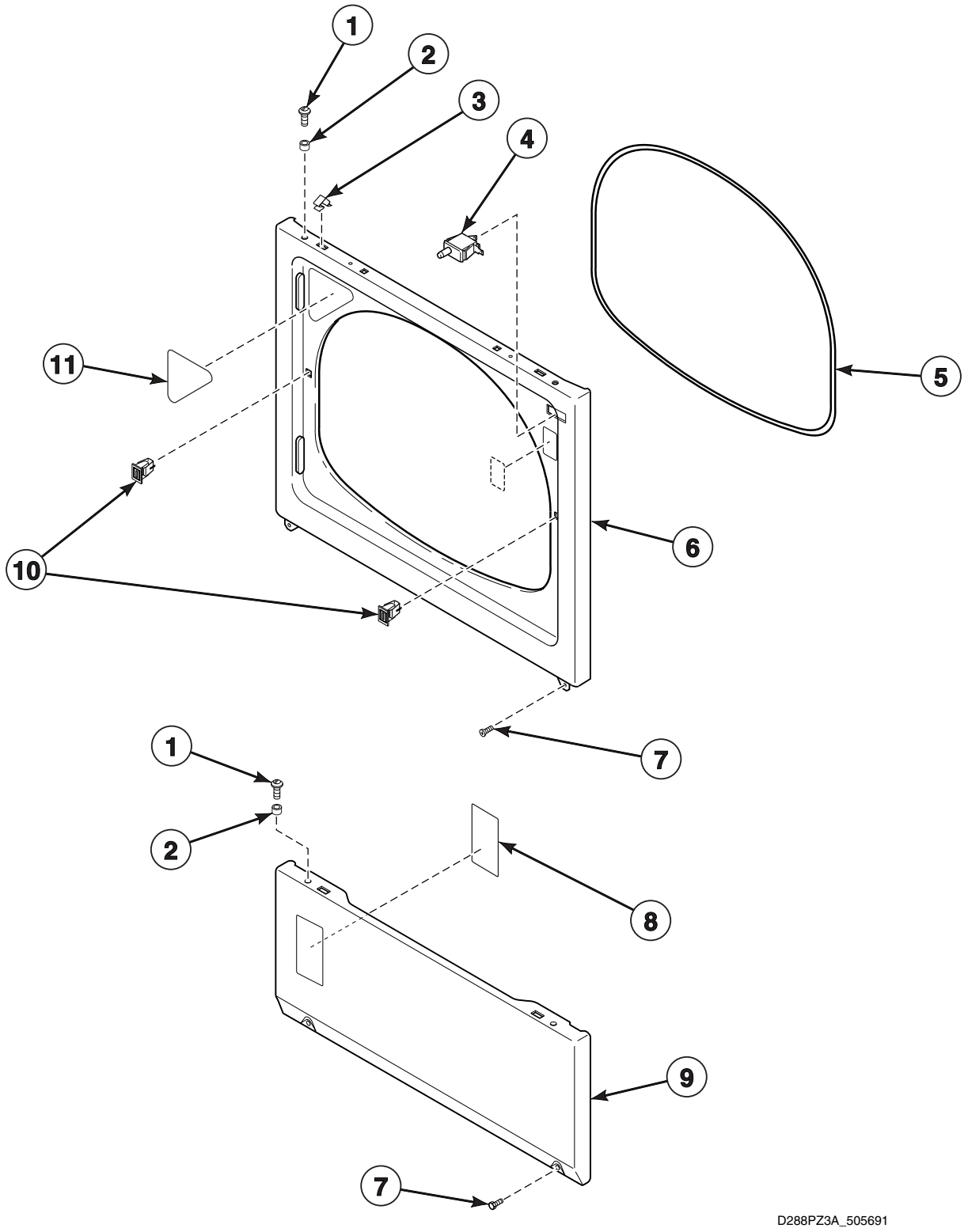



© Copyright, Alliance Laundry Systems LLC – DO NOT COPY or TRANSMIT

# Access Panel, Front Panel and Seal

| REF | PART NO. | DESCRIPTION | COMMENTS |
|---|---|---|---|
| 1 | 39733 | Screw | |
| 2 | 56079 | Panel Locator | |
| 3 | 28835 | Speed Clip | |
| 4 | 504570 | Switch | |
| 5 | 511056 | Front Panel Seal | |
| 6 | 510066W | Front Panel | White |
| | 510066L | Front Panel | Almond |
| 7 | 503661 | Screw | |
| 8 | 511004 | Gas Clearance Label | Gas models |
| 9 | 510069W | Access Panel | White |
| | 510069L | Access Panel | Almond |
| 10 | 510177 | Door Catch Assembly | |
| 11 | 500281 | Warning/Caution Label | |


© Copyright, Alliance Laundry Systems LLC – DO NOT COPY or TRANSMIT

# Motor, Exhaust Fan and Belt

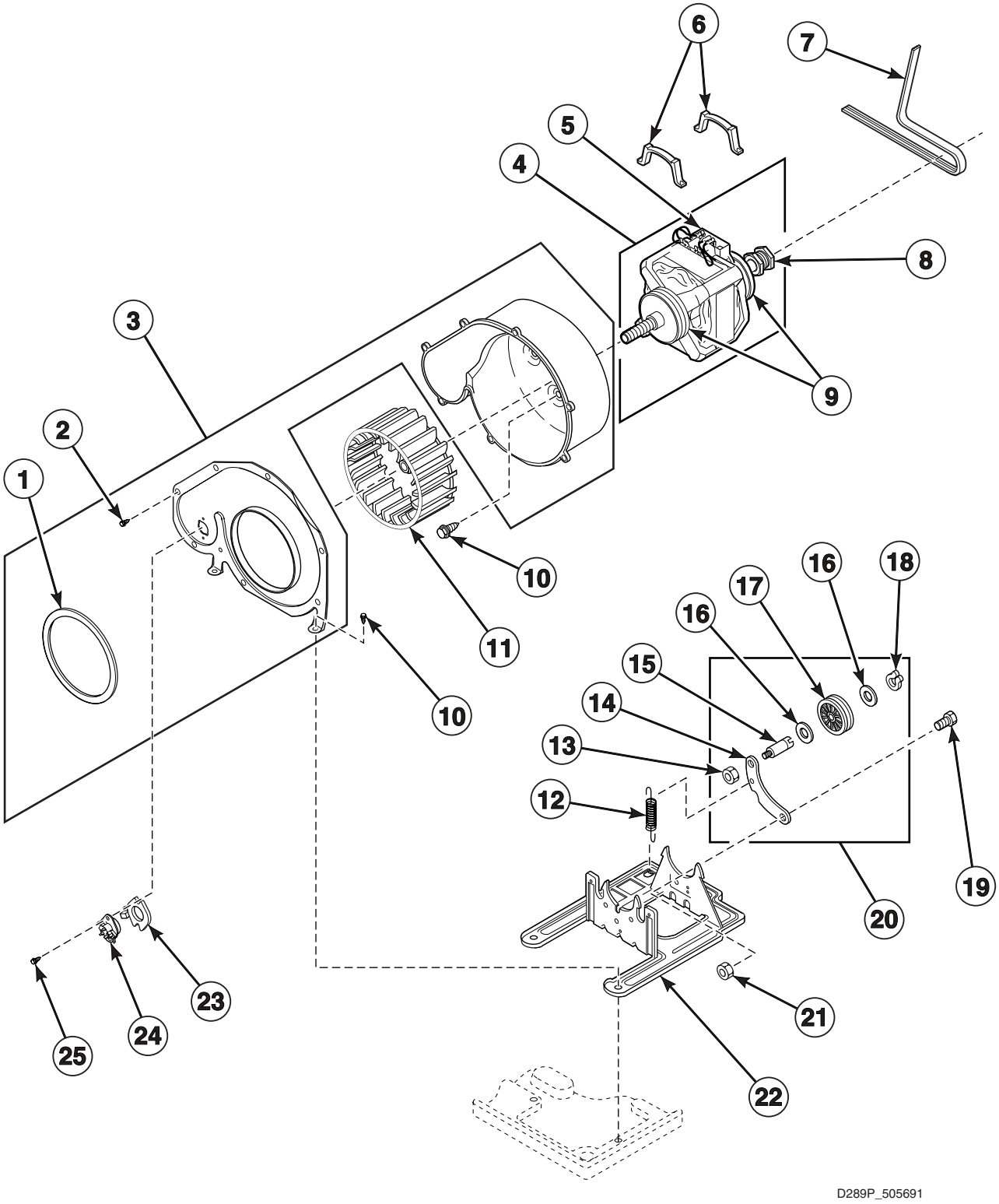



© Copyright, Alliance Laundry Systems LLC – DO NOT COPY or TRANSMIT

# Motor, Exhaust Fan and Belt

| REF | PART NO. | DESCRIPTION | COMMENTS |
|---|---|---|---|
| 1 | 510238P | Blower Housing Seal | |
| 2 | 31260 | Screw | |
| 3 | 511969P | Blower Housing and Cover Kit | Includes items 1 and 2 |
| 4 | 511629P | Motor and Pulley Assembly | 120 Volt/60 Hertz; Includes items 5, 8 and 9 |
| 5 | 501218P | Motor Switch Kit | Does not include thermal protector |
| 6 | 510180 | Motor Mount Clamp | |
| 7 | 511255 | Cylinder Belt | |
| 8 | 500011 | Motor Pulley | |
| 9 | 590P3 | Motor Hub Ring Kit | |
| 10 | 503661 | Screw | |
| 11 | 510139P | Blower Fan Assembly | |
| 12 | 510185 | Idler Spring | |
| 13 | 56156 | Nut | |
| 14 | 510133 | Idler Lever | |
| 15 | 56461 | Shaft | |
| 16 | 52549 | Washer | |
| 17 | 510142P | Idler Wheel and Bearing Assembly | |
| 18 | 23748 | Retaining Ring | |
| 19 | 500824 | Screw | |
| 20 | 510158 | Idler Lever and Wheel Assembly | Includes items 13-18 |
| 21 | 52566 | Nut | |
| 22 | 510060 | Motor Mount | |
| 23 | 61623 | Thermostat Heater | |
| 24 | 504514 | Thermostat | Orange; Models LES19A*, LES33A* and LES37A* |
| | 510707P | Thermostat | Pink/White; Models LGS19A*, LGS19A*-1188, LGS33A* and LGS37A* |
| 25 | 33561 | Screw | |

*** Add Letter To Designate Color. L - Almond W - White**


© Copyright, Alliance Laundry Systems LLC – DO NOT COPY or TRANSMIT

# Front Bulkhead, Air Duct, Cylinder and Removable Lint Filter

Models LES19A*, LES33A*, LGS19A*, LGS19A*-1188 and LGS33A*

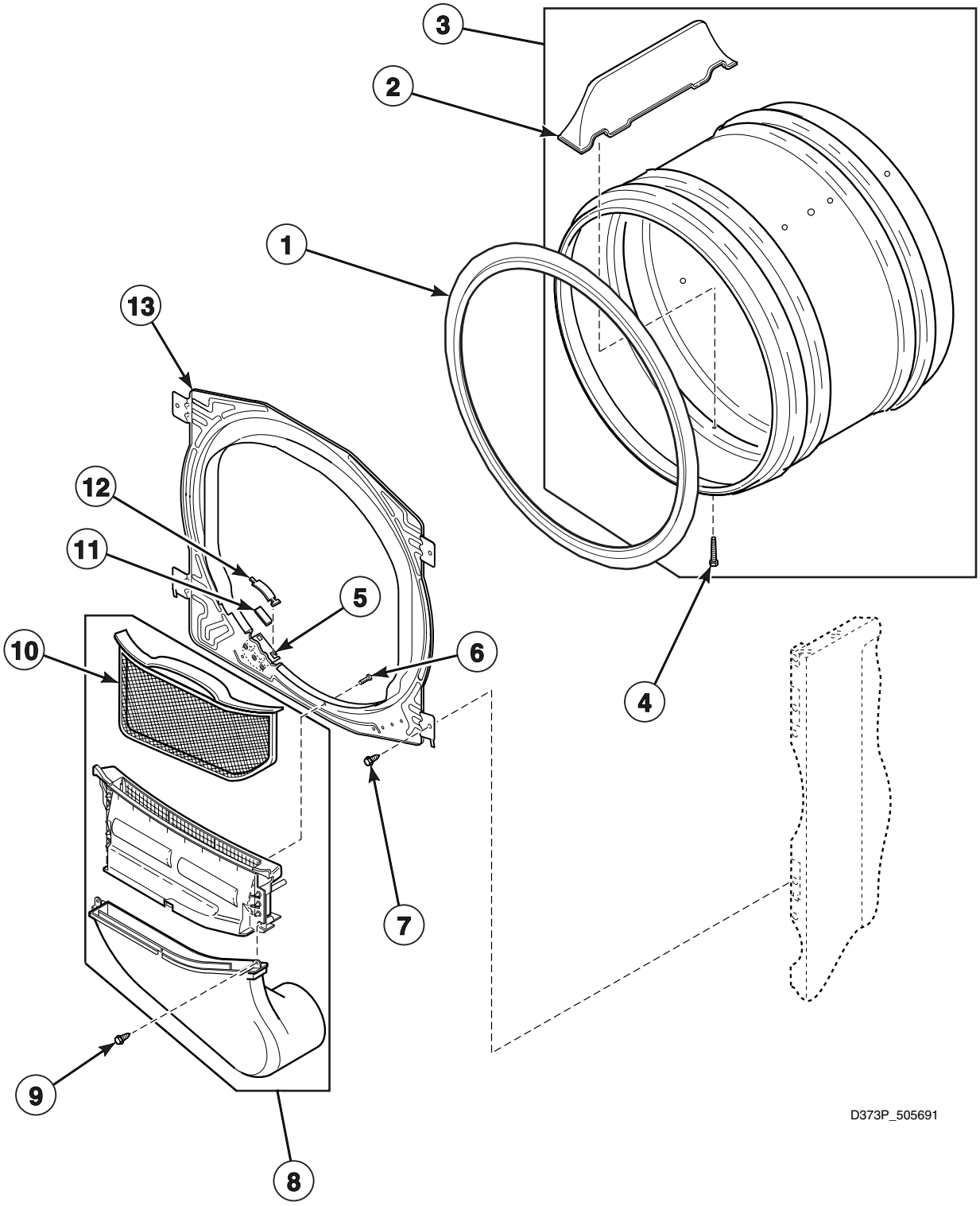



© Copyright, Alliance Laundry Systems LLC – DO NOT COPY or TRANSMIT

# Front Bulkhead, Air Duct, Cylinder and Removable Lint Filter

| REF | PART NO. | DESCRIPTION | COMMENTS |
|---|---|---|---|
| | 511637 | Adhesive | For cylinder seal |
| 1 | 510207P | Cylinder Seal Assembly | |
| 2 | 503703 | Cylinder Baffle | |
| 3 | 510159W | Cylinder Assembly | White; Includes items 2 and 4; Models LES33A* and LGS33A* |
| | 510265P | Cylinder Assembly | Galvanized; Includes items 2 and 4; Models LES19A*, LGS19A* and LGS19A*-1188 |
| 4 | 62588 | Screw | |
| 5 | 510145 | Cylinder Glide Bracket | |
| 6 | 500226 | Screw | |
| 7 | 503661 | Screw | |
| 8 | 750P3 | Air Duct and Door Liner Kit | Includes item 10 |
| 9 | 501285 | Screw | |
| 10 | 503627 | Lint Filter | |
| 11 | 510189 | Felt Pad | |
| 12 | 510187 | Cylinder Glide | |
| 13 | 511033W | Front Bulkhead Assembly | |

*** Add Letter To Designate Color. L - Almond W - White**


© Copyright, Alliance Laundry Systems LLC – DO NOT COPY or TRANSMIT

# Front Bulkhead, Air Duct, Cylinder and Secured Lint Filter

Models LES37A* and LGS37A*

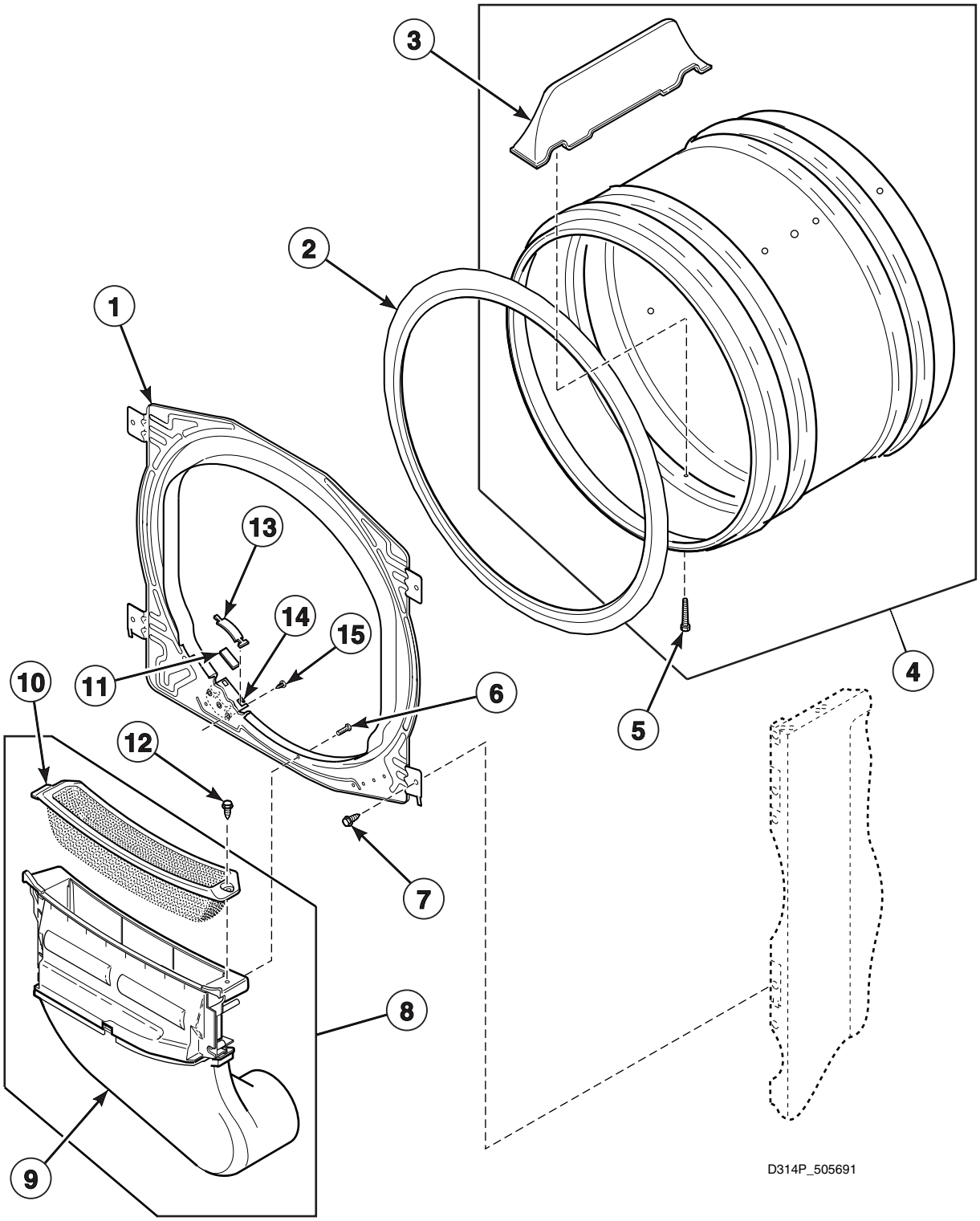



© Copyright, Alliance Laundry Systems LLC – DO NOT COPY or TRANSMIT

# Front Bulkhead, Air Duct, Cylinder and Secured Lint Filter

| REF | PART NO. | DESCRIPTION | COMMENTS |
|---|---|---|---|
| | 511637 | Adhesive | For cylinder seal |
| **1** | 510266 | Front Bulkhead Assembly | |
| **2** | 510207P | Cylinder Seal Assembly | |
| **3** | 503703 | Cylinder Baffle | |
| **4** | 510159W | Cylinder Assembly | Includes items 3 and 5 |
| **5** | 62588 | Screw | |
| **6** | 500226 | Screw | |
| **7** | 503688 | Screw | |
| **8** | 750P3 | Air Duct and Door Liner Kit | Includes items 9 and 10 |
| **9** | 510151 | Air Duct Assembly | |
| **10** | 503980 | Lint Filter | |
| **11** | 500121 | Felt Pad | |
| **12** | 501285 | Screw | |
| **13** | 510187 | Cylinder Glide | 2 required per side |
| **14** | 510145 | Cylinder Glide Bracket | |
| **15** | 70058501 | Pop Rivet | |

*** Add Letter To Designate Color. L - Almond W - White**


© Copyright, Alliance Laundry Systems LLC – DO NOT COPY or TRANSMIT

# Rear Bulkhead, Felt Seal, Cylinder Roller and Terminal Block

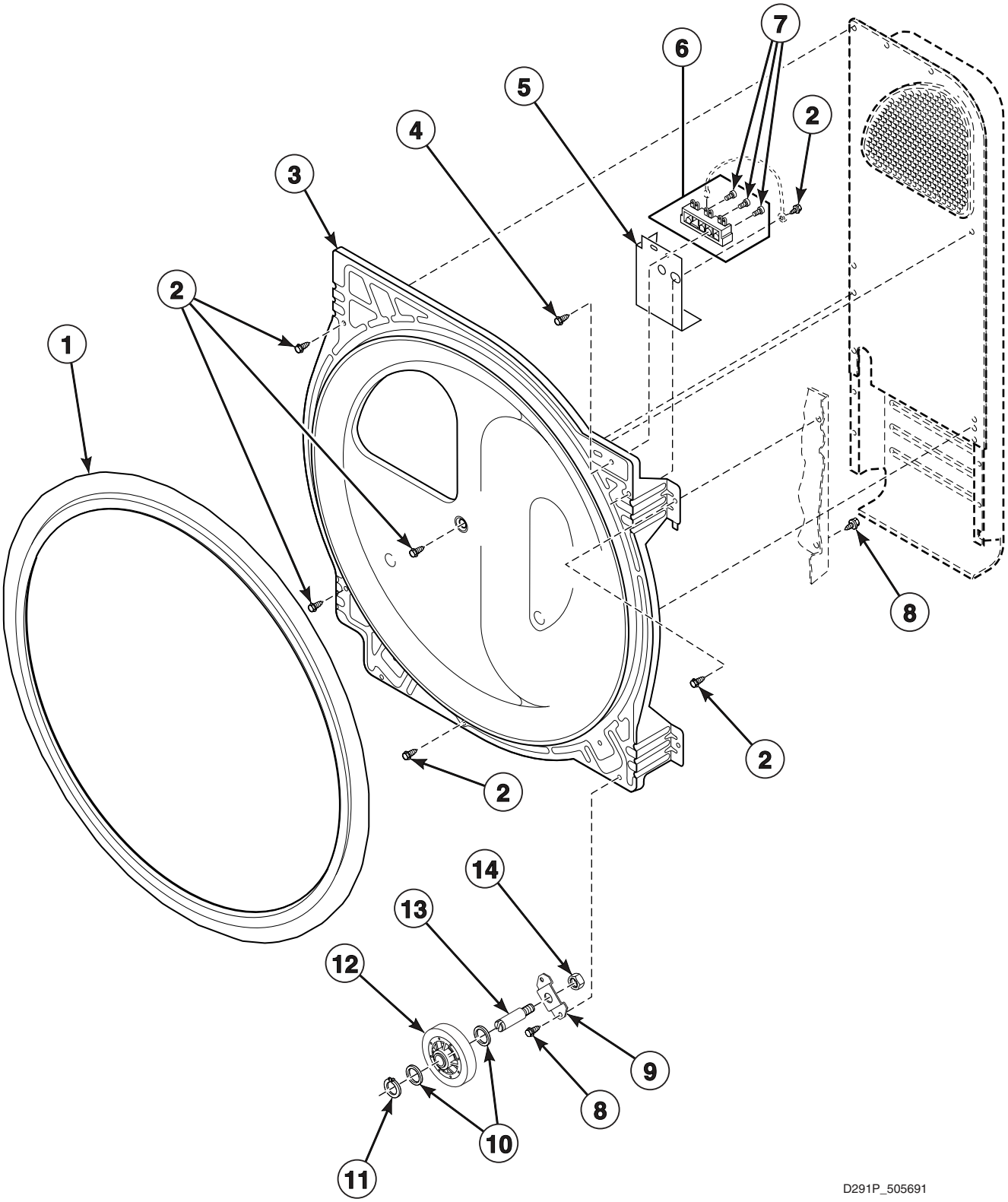



© Copyright, Alliance Laundry Systems LLC – DO NOT COPY or TRANSMIT

# Rear Bulkhead, Felt Seal, Cylinder Roller and Terminal Block

| REF | PART NO. | DESCRIPTION | COMMENTS |
|---|---|---|---|
| | 511637 | Adhesive | For cylinder seal |
| **1** | 510207P | Cylinder Seal Assembly | |
| **2** | 503661 | Screw | |
| **3** | 510905W | Rear Bulkhead Assembly | Painted; Includes item 1 |
| **4** | 501285 | Screw | |
| **5** | 510237 | Terminal Block Shield | |
| **6** | 510190P | Terminal Block Assembly | Includes 3 of item 7 |
| **7** | 61199 | Screw | |
| **8** | 503688 | Screw | |
| **9** | 510100 | Cylinder Roller Bracket | |
| **10** | 52549 | Washer | |
| **11** | 23748 | Retaining Ring | |
| **12** | 510708P | Cylinder Roller | |
| **13** | 56461 | Shaft | |
| **14** | 56156 | Nut | |


© Copyright, Alliance Laundry Systems LLC – DO NOT COPY or TRANSMIT

# Heater Duct and Element Assembly

Electric Models

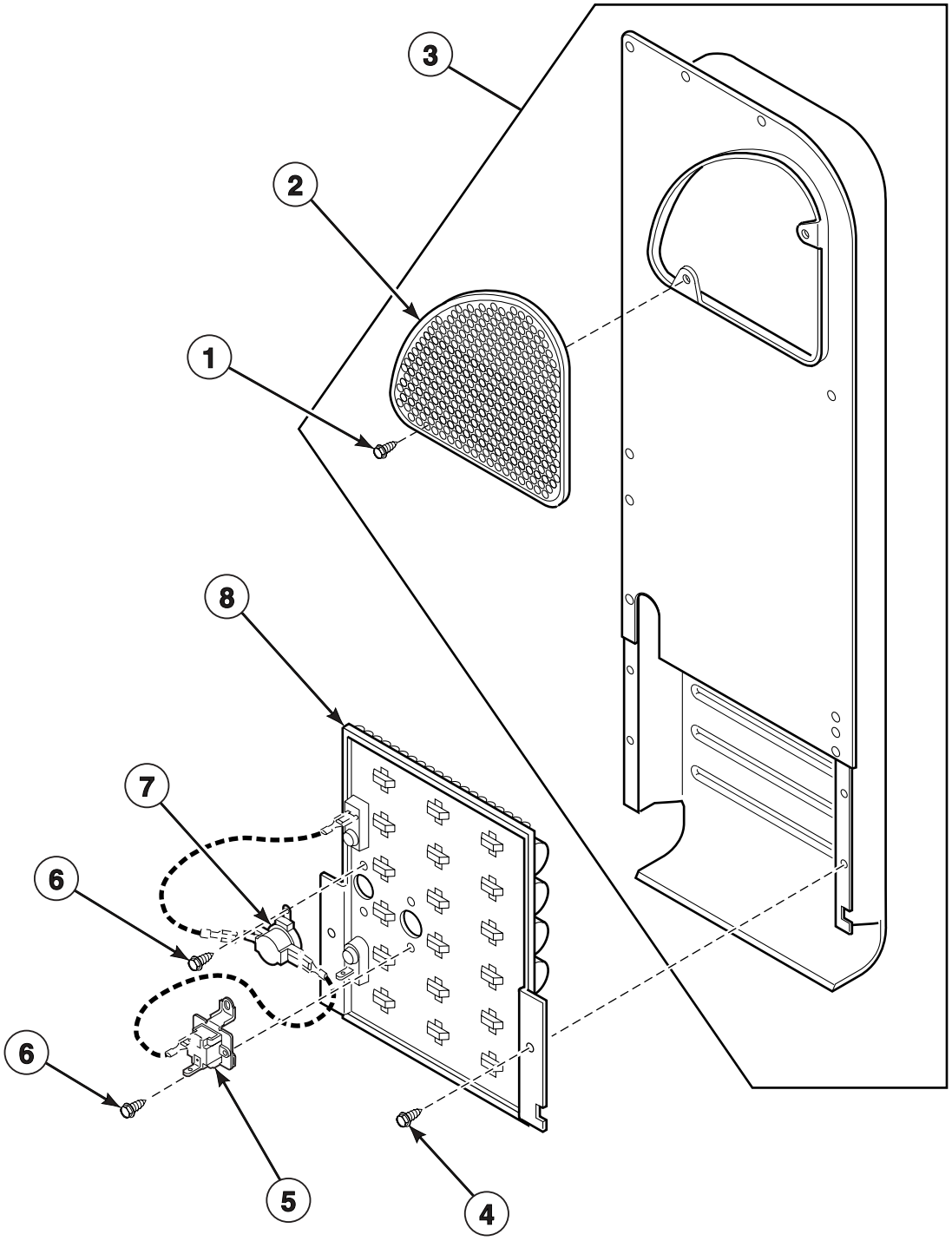


D292P_505691


© Copyright, Alliance Laundry Systems LLC – DO NOT COPY or TRANSMIT

# Heater Duct and Element Assembly

| REF | PART NO. | DESCRIPTION | COMMENTS |
|---|---|---|---|
| **1** | 23962 | Screw | |
| **2** | 500820 | Outlet Cover | |
| **3** | 510025P | Heater Duct and Screw Assembly | Includes items 1 and 2 |
| **4** | 503688 | Screw | |
| **5** | 511412 | Thermal Fuse Assembly | |
| **6** | 23222 | Screw | |
| **7** | 510701 | Limit Thermostat | |
| **8** | 510329P | Heater Assembly | |


© Copyright, Alliance Laundry Systems LLC – DO NOT COPY or TRANSMIT

# Heater Duct Assembly

Gas Models

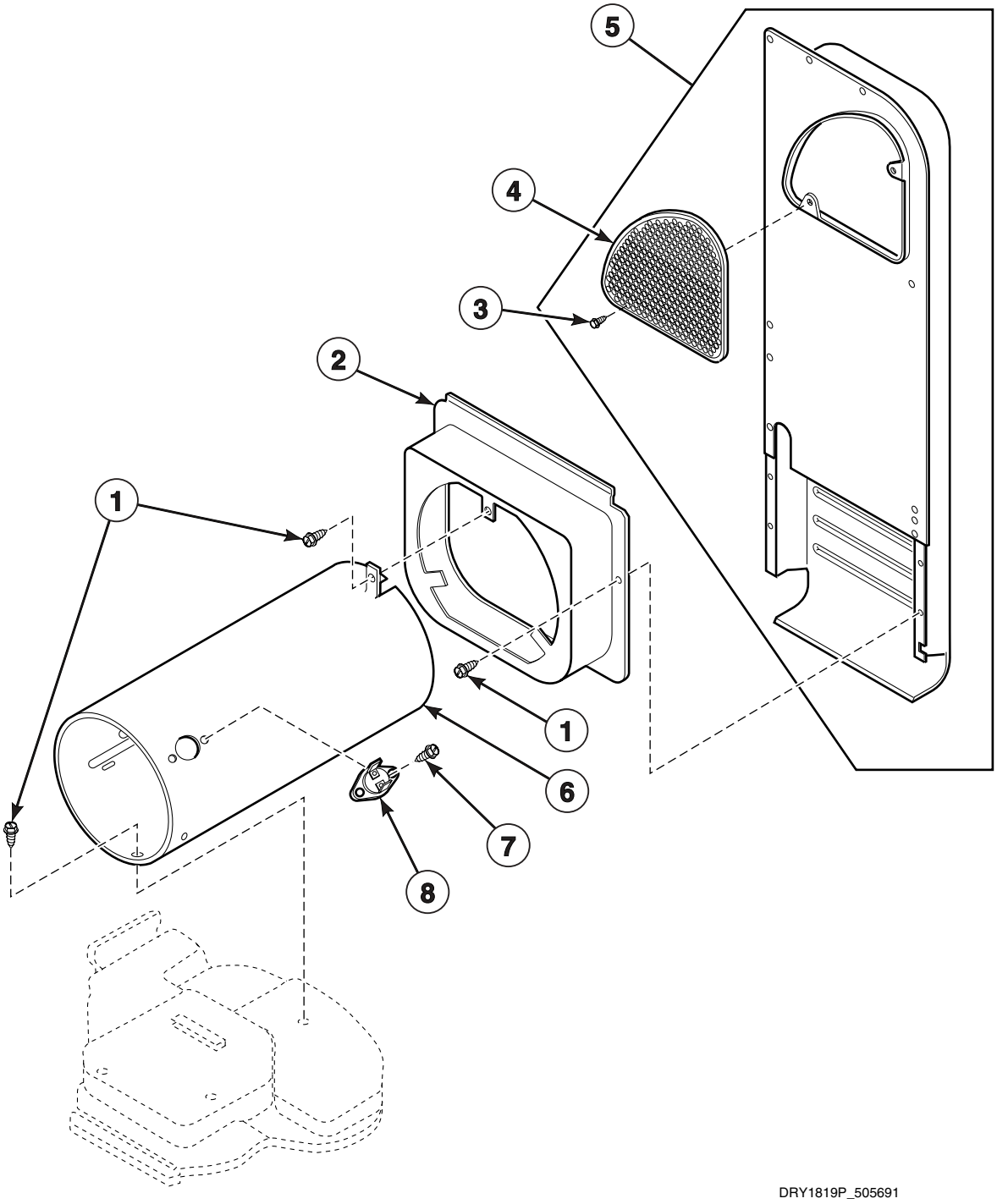



© Copyright, Alliance Laundry Systems LLC – DO NOT COPY or TRANSMIT

# Heater Duct Assembly

| REF | PART NO. | DESCRIPTION | COMMENTS |
|---|---|---|---|
| **1** | 503688 | Screw | |
| **2** | 510101 | Heat Duct Shroud | |
| **3** | 23962 | Screw | |
| **4** | 500820 | Outlet Cover | |
| **5** | 510025P | Heater Duct and Screw Assembly | Includes item 3 and 4 |
| **6** | 510131 | Combustion Duct | |
| **7** | 51782 | Screw | |
| **8** | 510702 | Limit Thermostat | Auto reset |


© Copyright, Alliance Laundry Systems LLC – DO NOT COPY or TRANSMIT

# Gas Valve, Igniter and Gas Conversion Kits

Gas Models

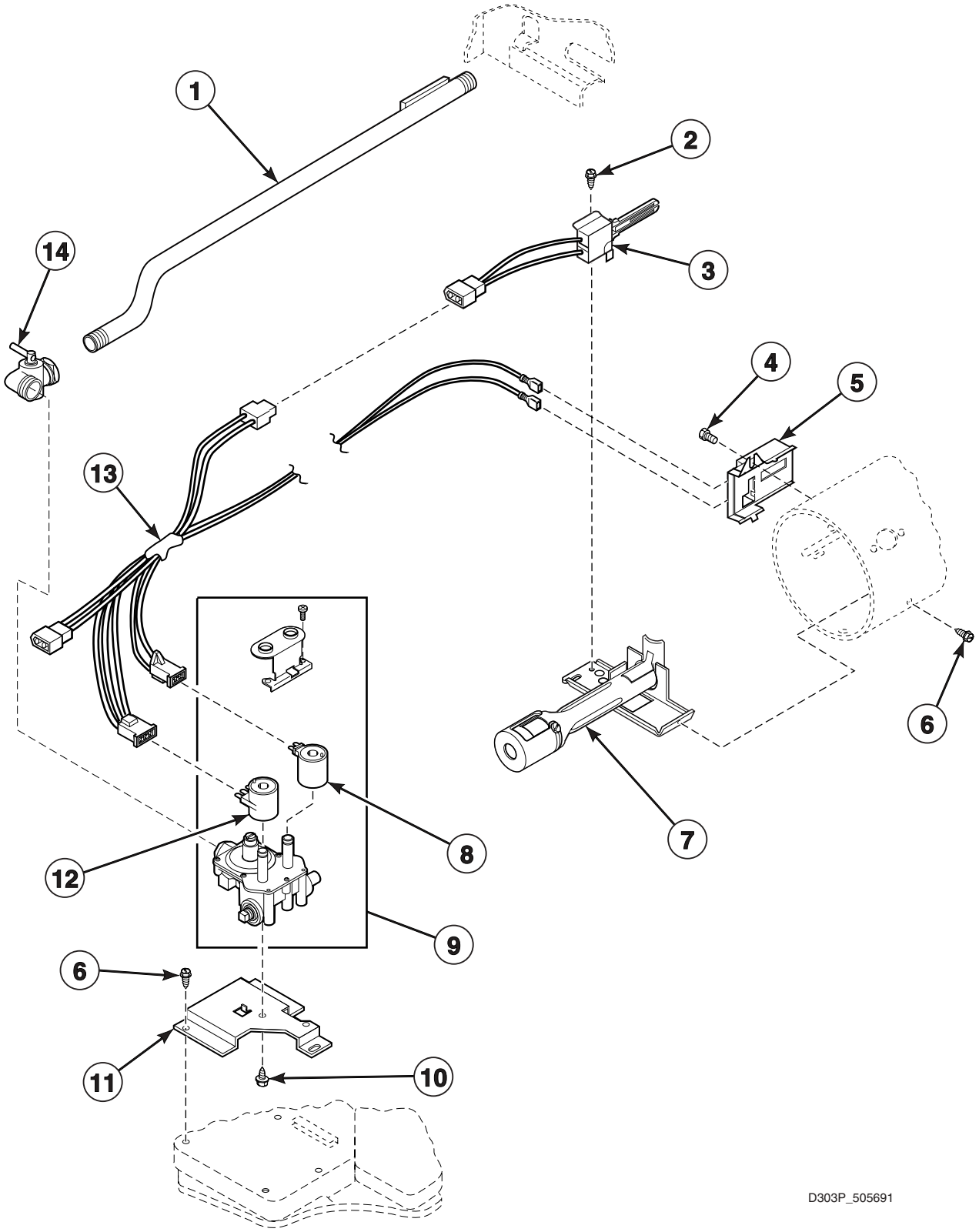



© Copyright, Alliance Laundry Systems LLC – DO NOT COPY or TRANSMIT

# Gas Valve, Igniter and Gas Conversion Kits

| REF | PART NO. | DESCRIPTION | COMMENTS |
|---|---|---|---|
| | 649P3 | L.P. Conversion Kit | Used to convert dryers from Natural Gas (N.G.) or Mixed Gas to Liquid Petroleum Gas (L.P.) |
| | 650P3 | N.G. Conversion Kit | Used to convert dryers from L.P. to N.G. or Mixed Gas |
| **1** | 510204 | Lead-in Pipe Assembly | |
| **2** | 51782 | Screw | |
| **3** | 510184P | Igniter and Bracket Assembly | |
| **4** | 23222 | Screw | |
| **5** | 510213 | Sensor | |
| **6** | 503688 | Screw | |
| **7** | 510149P | Burner Assembly | |
| **8** | 58804B | Secondary Coil | |
| **9** | 510506P | Gas Valve Assembly | Includes items 8 and 12 |
| **10** | 56124 | Screw | |
| **11** | 510128 | Gas Valve Mounting Bracket | |
| **12** | 58804A | Booster and Holding Coil | |
| **13** | 510530 | Gas Valve Wire Harness Assembly | |
| **14** | 510205 | Elbow Shut-Off Valve | |


© Copyright, Alliance Laundry Systems LLC – DO NOT COPY or TRANSMIT

# Cabinet, Exhaust Duct and Base

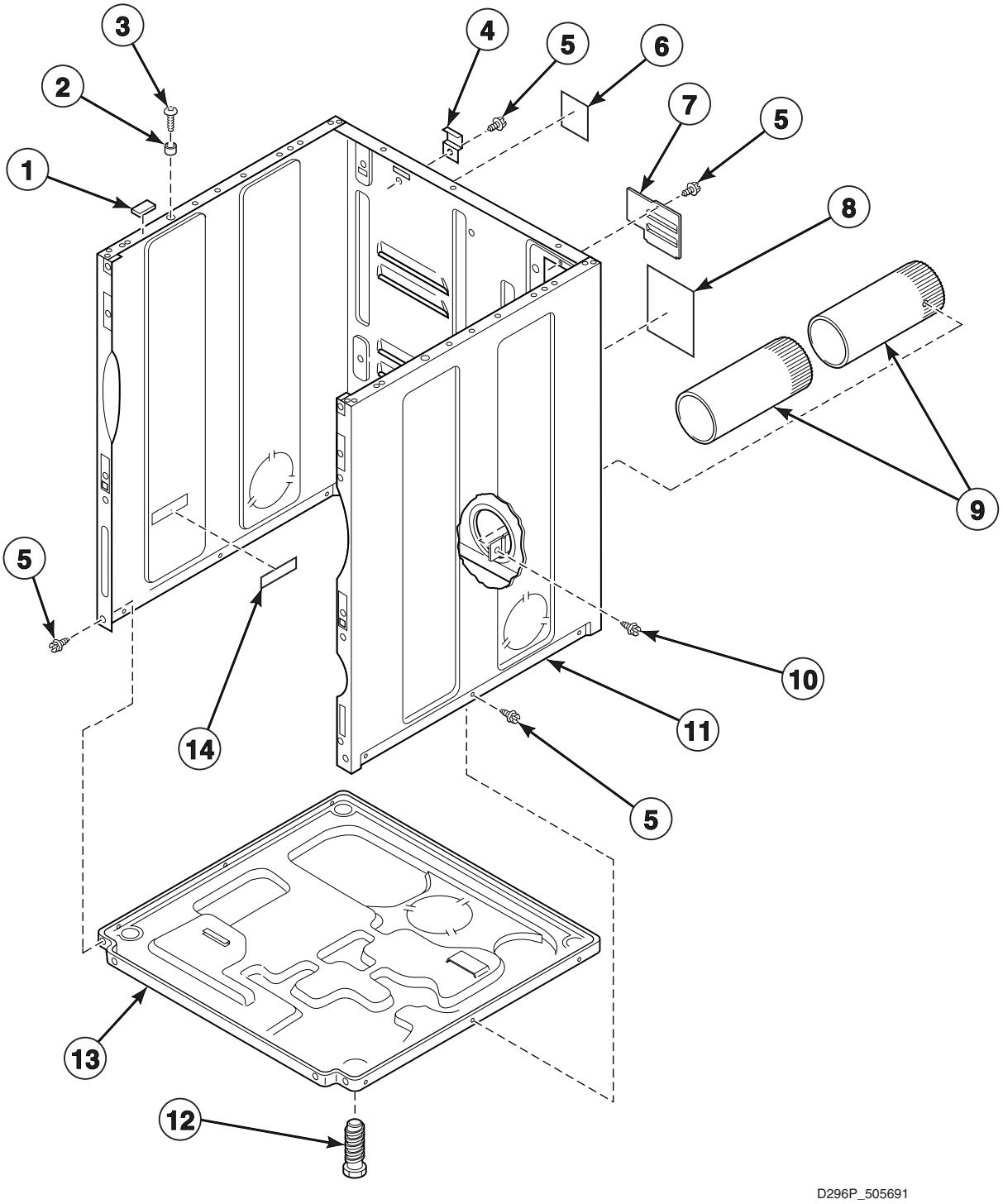



© Copyright, Alliance Laundry Systems LLC – DO NOT COPY or TRANSMIT

# Cabinet, Exhaust Duct and Base

| REF | PART NO. | DESCRIPTION | COMMENTS |
|---|---|---|---|
| | 521P3 | Flexible Venting Kit | |
| | 528P3 | Directional Exhaust Kit | Used to vent dryer out the sides or bottom |
| **1** | 56128 | Bumper Pad | |
| **2** | 56079 | Panel Locator | |
| **3** | 39733 | Screw | |
| **4** | 510136 | Top Hinge | |
| **5** | 503661 | Screw | |
| **6** | 500495 | 15 Amp Notice Label | Gas models |
| **7** | 510903 | Access Panel Plate | |
| **8** | 511005 | Electric Clearance Label | Electric models |
| **9** | 510137 | Exhaust Duct | Each dryer requires 2 pieces |
| **10** | 503688 | Screw | |
| **11** | 727P3W | Panel Kit | White |
| | 727P3L | Panel Kit | Almond |
| **12** | 510135 | Leveling Leg | |
| **13** | 510084 | Dryer Base | |
| **14** | 61294 | Fuse Notice Label | Electric models |


© Copyright, Alliance Laundry Systems LLC – DO NOT COPY or TRANSMIT

# Terminals and Clips

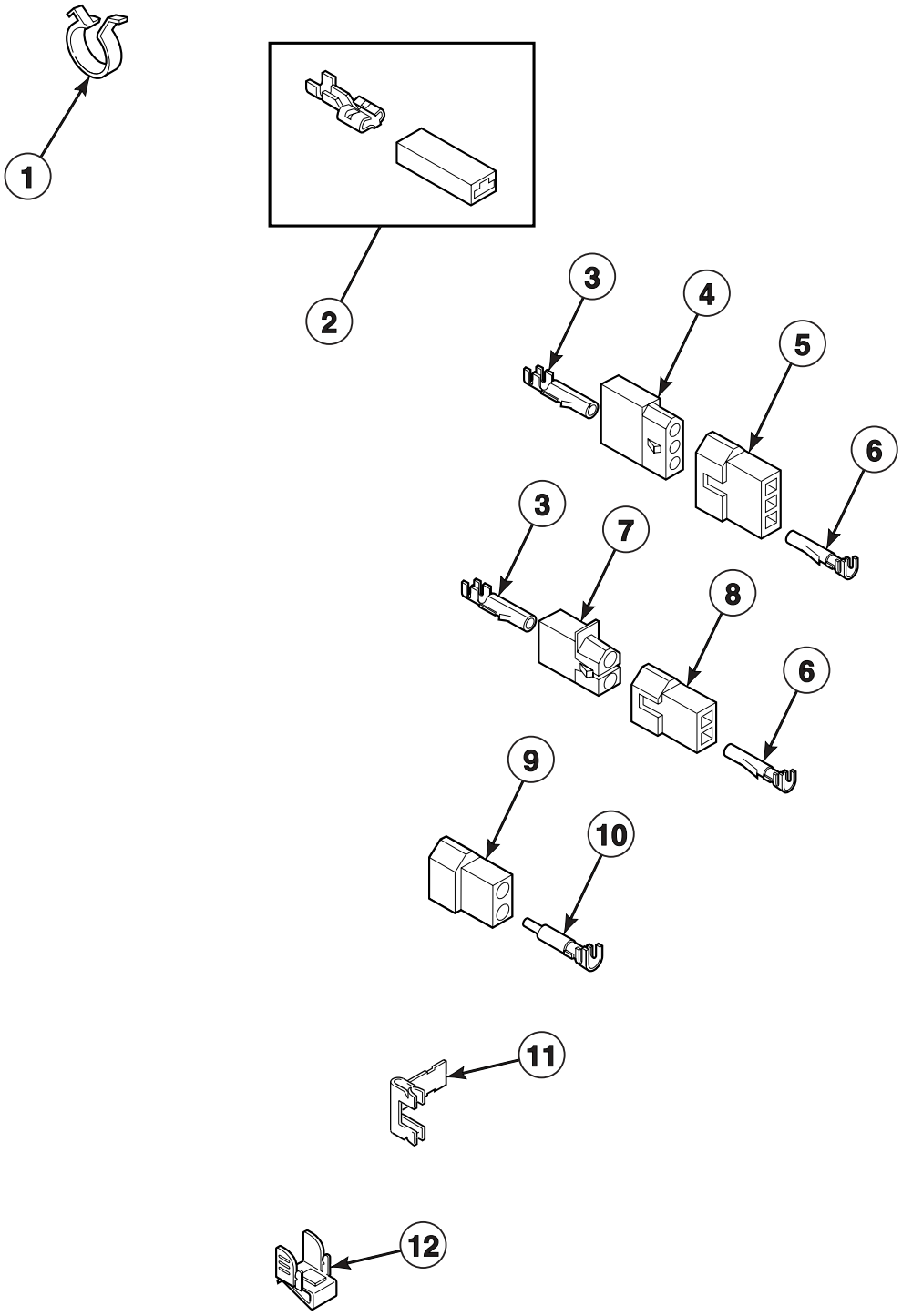


D375P_505691


© Copyright, Alliance Laundry Systems LLC – DO NOT COPY or TRANSMIT

# Terminals and Clips

| REF | PART NO. | DESCRIPTION | COMMENTS |
|---|---|---|---|
| **1** | 504034 | Wire Clip | |
| **2** | 00360 | Ultra Pod Terminal | (1) 12 gauge wire or (2) 18 gauge wires |
| **3** | 00117 | Female Pin Terminal | |
| **4** | 23039 | 3 Circuit Receptacle | |
| **5** | 23040 | Plug | |
| **6** | 00116 | Male Pin Terminal | |
| **7** | 56451 | 2 Circuit Receptacle | |
| **8** | 56448 | 2 Circuit Plug | |
| **9** | 56266 | 2 Circuit Plug | |
| **10** | 00127 | Male Pin Terminal | |
| **11** | 510182 | Harness Retaining Clip | |
| **12** | 00161 | Grounding Clip | |


© Copyright, Alliance Laundry Systems LLC – DO NOT COPY or TRANSMIT

# Terminals

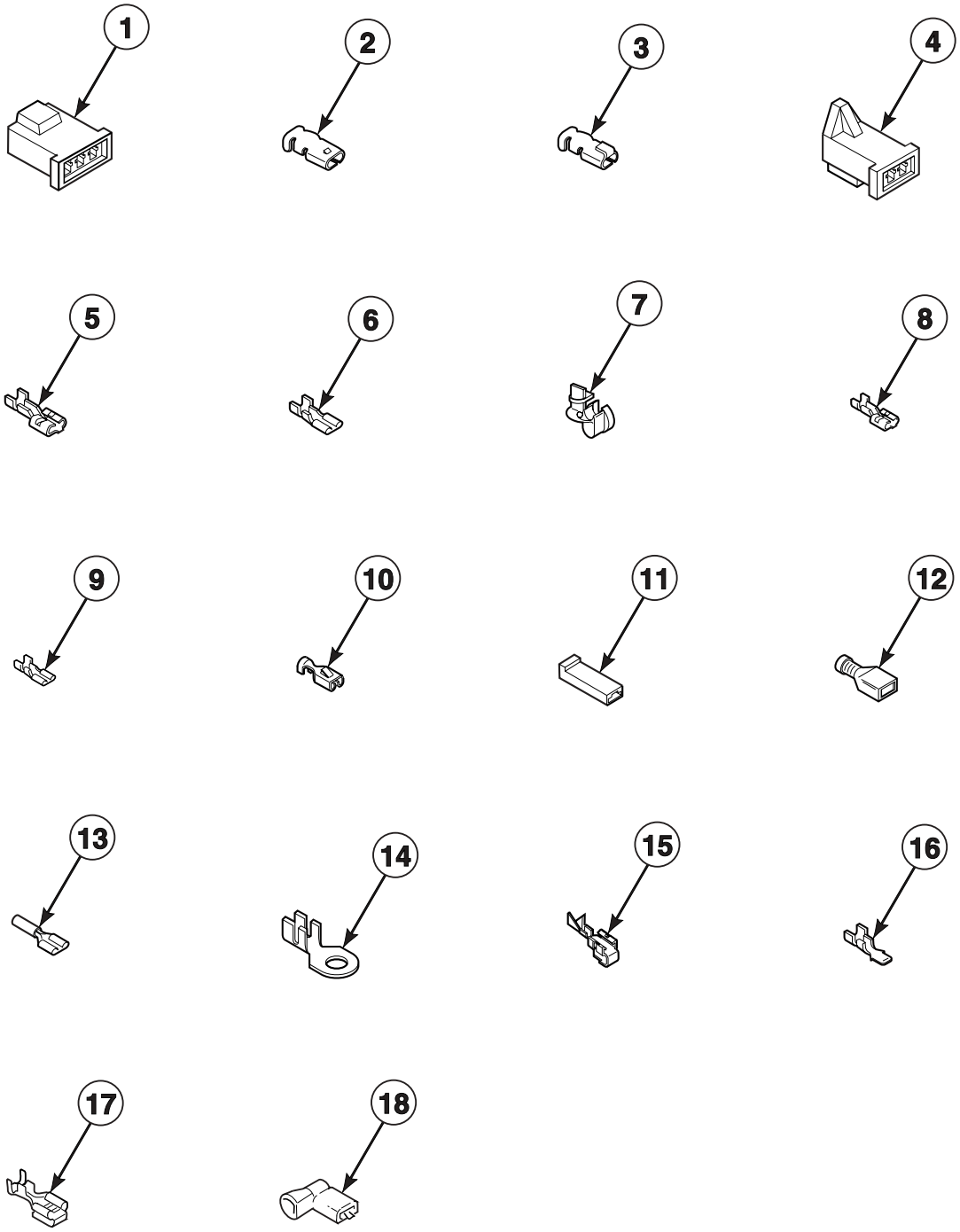


D379P_505691


© Copyright, Alliance Laundry Systems LLC – DO NOT COPY or TRANSMIT

# Terminals

| REF | PART NO. | DESCRIPTION | COMMENTS |
|---|---|---|---|
| 1 | 58800 | 3 Circuit Connector | |
| 2 | 00189 | Female Spade Terminal | |
| 3 | 00361 | Female Piggyback Terminal | |
| 4 | 58799 | 2 Circuit Connector | |
| 5 | 00223 | Female Spade Terminal | 1/4 inch; (1) 18 gauge wire |
| | 00121 | Female Spade Terminal | 1/4 inch; (2) 18 gauge wires or (1) 12 gauge wire |
| | 00245 | Spade Terminal | 1/4 inch; (1) 22 gauge wire |
| 6 | 00124 | Female Spade Terminal | 3/16 Inch; (1) 18 gauge wire; .020 tab |
| | 00156 | Female Spade Terminal | 3/16 inch; Thermostat wire; .032 tab |
| | 00209 | Female Spade Terminal | 3/16 inch; (2) 18 gauge wires; .020 tab |
| 7 | 38384 | Strain Relief | Gas models |
| 8 | 00346 | Terminal | |
| 9 | 00347 | Terminal | |
| 10 | 00115 | Female Spade Terminal | 1/4 inch; (1) 18 gauge wire |
| | 00321 | Female Spade Terminal | 1/4 inch; (2) 18 gauge wires or (1) 12 gauge wire |
| 11 | 90789 | Receptacle Housing | |
| 12 | 00359 | Ultra Pod Terminal | 1/4 inch |
| | 00165 | Insulated Female Terminal | 3/16 inch |
| 13 | N/A | Pre-Insulated Spade Terminal | 1/4 inch; 18 gauge wire |
| | 00215 | Pre-Insulated Spade Terminal | 1/4 inch; 12 gauge wire |
| 14 | 00110 | Ring Terminal | 10 stud; (1) 18 gauge wire |
| | 00111 | Ring Terminal | 10 stud; (2) 18 gauge wires or (1) 12 gauge wire |
| 15 | 00114 | Female Spade Terminal | 1/4 inch; Double connector |
| 16 | 00139 | Male Tab Terminal | 1/4 inch; (2) 18 gauge wires or (1) 12 gauge wire |
| 17 | 00344 | Female Tab Terminal | 1/4 inch |
| 18 | 00345 | Flag Insulated Terminal | 3/16 inch |

**N/A = Part no longer available**


© Copyright, Alliance Laundry Systems LLC – DO NOT COPY or TRANSMIT

# Terminals and Terminal Extractor Tools

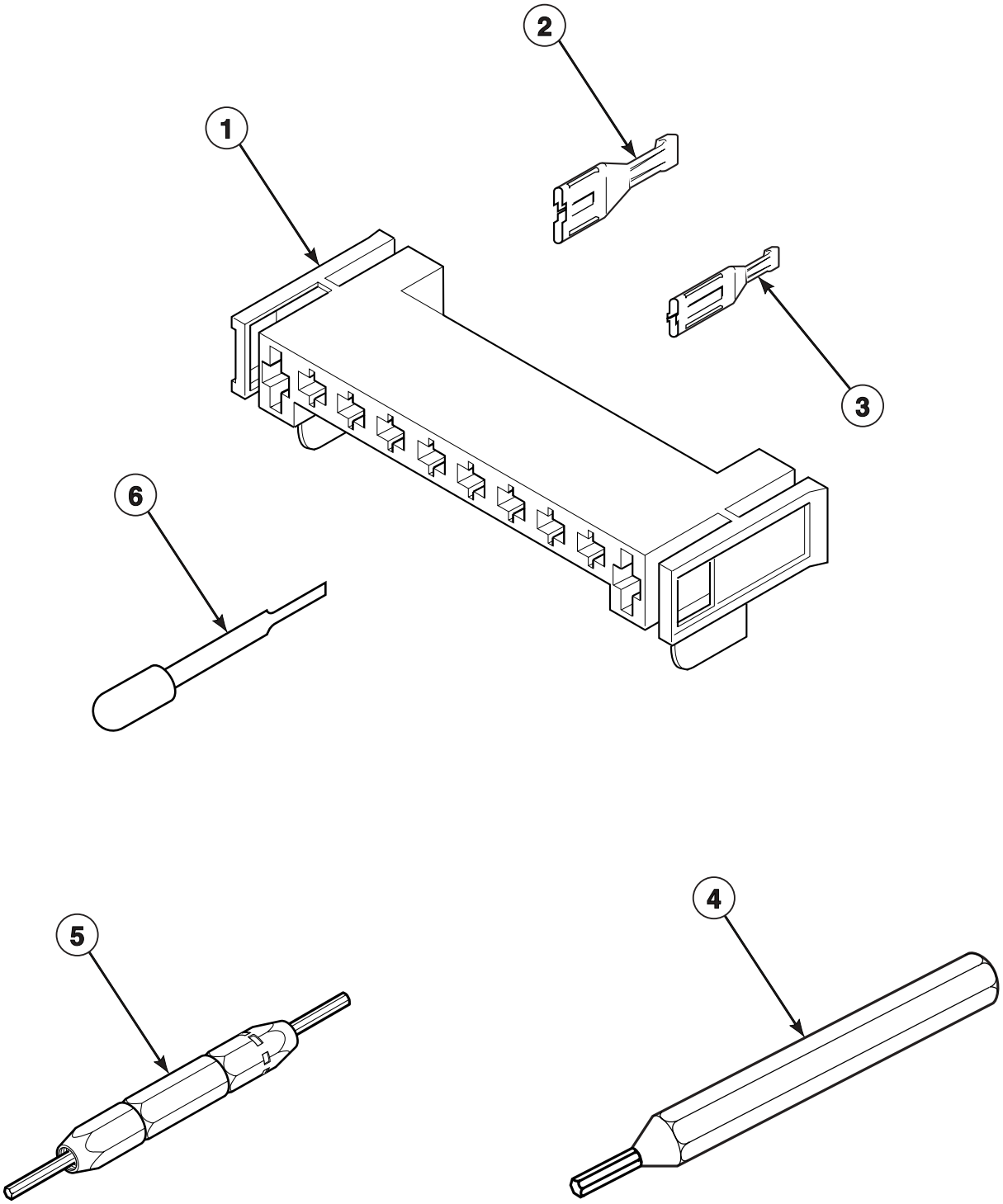



© Copyright, Alliance Laundry Systems LLC – DO NOT COPY or TRANSMIT

# Terminals and Terminal Extractor Tools

| REF | PART NO. | DESCRIPTION | COMMENTS |
|---|---|---|---|
| **1** | 500338 | 10 Position Housing | |
| **2** | 00256 | Female Terminal | 1/4 inch; For (1) or (2) 18 gauge wires |
| | 00255 | Female Terminal | 1/4 inch; For (1) 12 gauge wire |
| **3** | 00188 | Female Terminal | For 1 or 2 wire application |
| **4** | 128P4 | Extractor Tool | For use on gas dryer terminals |
| **5** | 190P4 | Extractor Tool | For use on electric dryer terminals |
| **6** | 283P4 | Terminal Extractor Tool | For use on Molex connectors |


© Copyright, Alliance Laundry Systems LLC – DO NOT COPY or TRANSMIT

# Wire Harnesses and Wires

| PART NO. | DESCRIPTION | COMMENTS |
|---|---|---|
| 510424P | Wire Harness Assembly | Model LES19A* |
| 510402P | Wire Harness Assembly | Models LES33A* and LES37A* |
| 510425 | Wire Harness Assembly | Models LGS19A* and LGS19A*-1188 |
| 510403 | Wire Harness Assembly | Models LGS33A* and LGS37A* |
| 45001 | 18 Gauge Wire | Black; Order wire by foot; Order terminals and connectors as required |
| 45380 | 12 Gauge Wire | Orange; Order wire by foot; Order terminals and connectors as required |

*** Add Letter To Designate Color. L - Almond W - White**

**NOTE: Individual wires are not available separately. Order complete wire harness or order wire by the foot. When applying terminals to wires, it is recommended that the terminals be soldered to the wires.**


© Copyright, Alliance Laundry Systems LLC – DO NOT COPY or TRANSMIT

# Parts Index


## A

Access Panel
510069L ..... 13
510069W ..... 13

Access Panel Plate
510903 ..... 29

Adhesive
511637 ..... 17, 19, 21

Air Duct and Door Liner Kit
750P3 ..... 17, 19

Air Duct Assembly
510151 ..... 19

## B

Blower Fan Assembly
510139P ..... 15

Blower Housing and Cover Kit
511969P ..... 15

Blower Housing Seal
510238P ..... 15

Booster and Holding Coil
58804A ..... 27

Bracket
510146 ..... 7

Bumper Pad
56128 ..... 29

Burner Assembly
510149P ..... 27

Buzzer
510211 ..... 5

## C

Combustion Duct
510131 ..... 25

Connector, 2 Circuit
58799 ..... 33

Connector, 3 Circuit
58800 ..... 33

Control Support Panel
503901 ..... 5

Cylinder Assembly
510159W ..... 17, 19
510265P ..... 17

Cylinder Baffle
503703 ..... 17, 19

Cylinder Belt
511255 ..... 15

Cylinder Glide
510187 ..... 17, 19

Cylinder Glide Bracket
510145 ..... 17, 19

Cylinder Roller
510708P ..... 21

Cylinder Roller Bracket
510100 ..... 21

Cylinder Seal Assembly
510207P ..... 17, 19, 21

## D

Directional Exhaust Kit
528P3 ..... 29

Disconnect Power Warning Label
505281 ..... 7

Door Catch Assembly
510177 ..... 13

Door Handle Wedge
510129 ..... 9, 11

Door Pull and Wedge Kit
510103LP ..... 9, 11
510103WP ..... 9, 11

Door Strike
510181 ..... 9, 11

Door Strike Mount
510127 ..... 9, 11

Dryer Base
510084 ..... 29

Dryer Door
510013L ..... 9, 11
510013W ..... 9, 11

## E

Elbow Shut-Off Valve
510205 ..... 27

Electric Clearance Label
511005 ..... 29

End Panel
504008L ..... 5
504008W ..... 5
504009L ..... 5
504009W ..... 5

Exhaust Duct
510137 ..... 29

Extractor Tool
128P4 ..... 35
190P4 ..... 35

## F

Fabric Selector Switch
510212 ..... 5

Felt Pad
500121 ..... 19
510189 ..... 17

Female Piggyback Terminal
00361 ..... 33

Female Pin Terminal
00117 ..... 31

Female Spade Terminal
00114 ..... 33


N/A items do not appear in index.


© Copyright, Alliance Laundry Systems LLC – DO NOT COPY or TRANSMIT

00115 ..... 33
00121 ..... 33
00124 ..... 33
00156 ..... 33
00189 ..... 33
00209 ..... 33
00223 ..... 33
00321 ..... 33

Female Tab Terminal
00344 ..... 33

Female Terminal
00188 ..... 35
00255 ..... 35
00256 ..... 35

Flag Insulated Terminal
00345 ..... 33

Flexible Venting Kit
521P3 ..... 29

Front Bulkhead Assembly
510266 ..... 19
511033W ..... 17

Front Panel
510066L ..... 13
510066W ..... 13

Front Panel Seal
511056 ..... 13

Fuse Notice Label
61294 ..... 29

## G

Gas Clearance Label
511004 ..... 13

Gas Valve Assembly
510506P ..... 27

Gas Valve Mounting Bracket
510128 ..... 27

Gas Valve Wire Harness Assembly
510530 ..... 27

Graphic Panel
504020W ..... 5
504197W ..... 5

Grounding Clip
00161 ..... 31

## H

Harness Retaining Clip
510182 ..... 31

Heat Duct Shroud
510101 ..... 25

Heater Assembly
510329P ..... 23

Heater Duct and Screw Assembly
510025P ..... 23, 25

Hinge
503676 ..... 9, 11

Hold-Down Spring Clip
503876 ..... 7

Hood Back Panel
510099 ..... 7

Housing, 10 Position
500338 ..... 35

## I

Idler Lever
510133 ..... 15

Idler Lever and Wheel Assembly
510158 ..... 15

Idler Spring
510185 ..... 15

Idler Wheel and Bearing Assembly
510142P ..... 15

Igniter and Bracket Assembly
510184P ..... 27

Insulated Female Terminal
00165 ..... 33

## K

Knob Assembly
33688 ..... 5

## L

Lead-in Pipe Assembly
510204 ..... 27

Leveling Leg
510135 ..... 29

Limit Thermostat
510701 ..... 23
510702 ..... 25

Liner and Seal Assembly
510289W ..... 9

Liner Door Seal
510147P ..... 9, 11

Liner, Seal and Grill Assembly
510163WP ..... 11

Lint Filter
503627 ..... 17
503980 ..... 19

L.P. Conversion Kit
649P3 ..... 27

## M

Male Pin Terminal
00116 ..... 31
00127 ..... 31

Male Tab Terminal
00139 ..... 33

Motor and Pulley Assembly
511629P ..... 15

Motor Hub Ring Kit
590P3 ..... 15

Motor Mount
510060 ..... 15

Motor Mount Clamp
510180 ..... 15

N/A items do not appear in index.


© Copyright, Alliance Laundry Systems LLC – DO NOT COPY or TRANSMIT

Motor Pulley
500011 ..... 15
Motor Switch Kit
501218P ..... 15

## N

Notice Label, 15 Amp
500495 ..... 29
Nut
52566 ..... 15
56156 ..... 15, 21
N.G. Conversion Kit
650P3 ..... 27

## O

Outlet Cover
500820 ..... 23, 25

## P

Panel Kit
727P3L ..... 29
727P3W ..... 29
Panel Locator
56079 ..... 13, 29
Plug
23040 ..... 31
Plug, 2 Circuit
56266 ..... 31
56448 ..... 31
Pop Rivet
70058501 ..... 19
Pre-Insulated Spade Terminal
00215 ..... 33

## R

Rear Bulkhead Assembly
510905W ..... 21
Receptacle Housing
90789 ..... 33
Receptacle, 2 Circuit
56451 ..... 31
Receptacle, 3 Circuit
23039 ..... 31
Retaining Ring
23748 ..... 15, 21
Ring Terminal
00110 ..... 33
00111 ..... 33

## S

Screw
23222 ..... 23, 27
23962 ..... 23, 25
31260 ..... 15
33561 ..... 15
39733 ..... 13, 29
500226 ..... 11, 17, 19
500824 ..... 15
501086 ..... 5, 7
501285 ..... 17, 19, 21
503661 ..... 7, 13, 15, 17, 21, 29
503688 ..... 7, 19, 21, 23, 25, 27, 29
505295 ..... 9, 11
51782 ..... 25, 27
56124 ..... 27
61199 ..... 21
62588 ..... 17, 19
Secondary Coil
58804B ..... 27
Sensor
510213 ..... 27
Shaft
56461 ..... 15, 21
Spade Terminal
00245 ..... 33
Speed Clip
28835 ..... 13
Strain Relief
38384 ..... 33
Switch
504570 ..... 13

## T

Terminal
00346 ..... 33
00347 ..... 33
Terminal Block Assembly
510190P ..... 21
Terminal Block Shield
510237 ..... 21
Terminal Extractor Tool
283P4 ..... 35
Thermal Fuse Assembly
511412 ..... 23
Thermostat
504514 ..... 15
510707P ..... 15
Thermostat Heater
61623 ..... 15
Timer
505794P ..... 5
Timer and Harness Kit
505797P ..... 5
Timer Knob Assembly
510287L ..... 5
512117W ..... 5
Top Cover
505808L ..... 5
505808W ..... 5
Top Hinge
510136 ..... 29
Top Panel Kit
510029LP ..... 7
510029WP ..... 7

N/A items do not appear in index.


© Copyright, Alliance Laundry Systems LLC – DO NOT COPY or TRANSMIT

## U

Ultra Pod Terminal
00359 ..... 33
00360 ..... 31

## W

Warning/Caution Label
500281 ..... 13
Washer
52549 ..... 15, 21
Wire Clip
504034 ..... 31
Wire Harness Assembly
510402P ..... 36
510403 ..... 36
510424P ..... 36
510425 ..... 36
Wire, 12 Gauge
45380 ..... 36
Wire, 18 Gauge
45001 ..... 36

N/A items do not appear in index.


© Copyright, Alliance Laundry Systems LLC – DO NOT COPY or TRANSMIT